EV

Entroview video handset

Overview

The Entroview Video Handset allows an occupant of a dwelling to answer a call from a visitor at a communal entrance and have a two-way simultaneous conversation. The video option allows the occupant to see and identify the visitor and their location. They can then enable the remote operation of the electric locking device to permit the visitor access.

The EV is constructed from hard wearing ABS plastic which has good mechanical properties; impact resistance and toughness. The handset is a 'surface mount' design with a low profile pattress / bracket that can be optionally fitted over a 1 gang electrical backbox.

The EV is compatible with APEX and ELITE systems and can be used with optional accessories that enhance accessibility; Sounder and Beacon.

OPTIONAL ACCESSORY

SOUNDER - 8 LED Sounder/Beacon Enhances Accessibility.

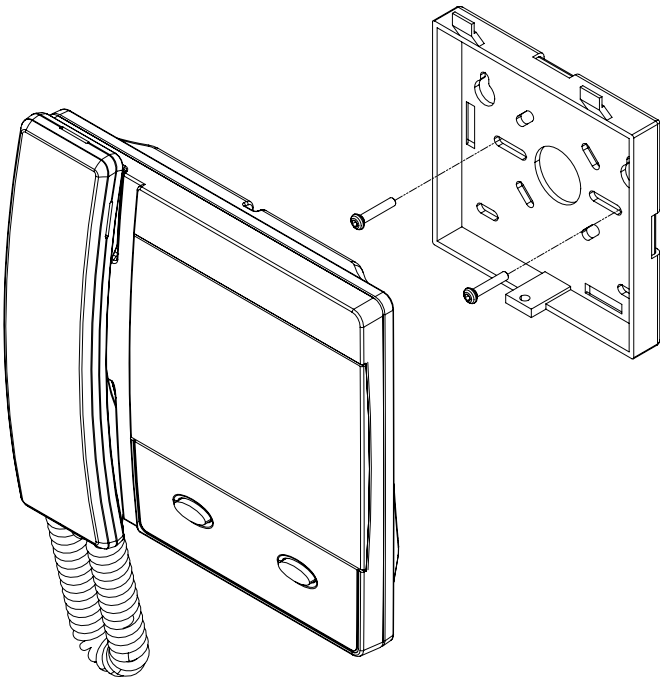

Technical characteristics

Display	4.3" IPS TFT LCD, 480x272
Viewing Angle	L-80^0, R-80^0, U-80^0, D-80^0
Buttons	Silicone rubber tactile function buttons:
Door Release	Momentary, Illuminated Green LED
Privacy	Momentary, Illuminated Red Status LED. Can also be disabled or set to latch on/off
Call Tone	Pulsed Tone with User Volume Adjustment
Volume	85.4dB SPL Max (at 1 metre)
Operating Voltage	12-15VDC (13.8V Nominal)
Power	0.4W Idle, 0.7W Active
Connections	12 Way Pluggable Screw Terminals
Dimensions	(WxHxD) 190 x 165 x 45mm (approx.)

© EV0222 - 2022 - EN

CAME ENTROTEC